REVISIONS				
LTR	DESCRIPTION	E.C.N.	DATE	BY/APP'D
A	RELEASE TO DOCUMENT CONTROL	09898	07/27/93	KES/FL
B	ADD STAND-OFF DIM & NOTE 5.	10154	12/01/93	KES/KHT
C	BACK VIEW: .200 [5.08] MIN WAS .250 [6.35] MIN; NOTE 2: 0.08mm WAS 0.05mm.	10773	01/10/95	MS/

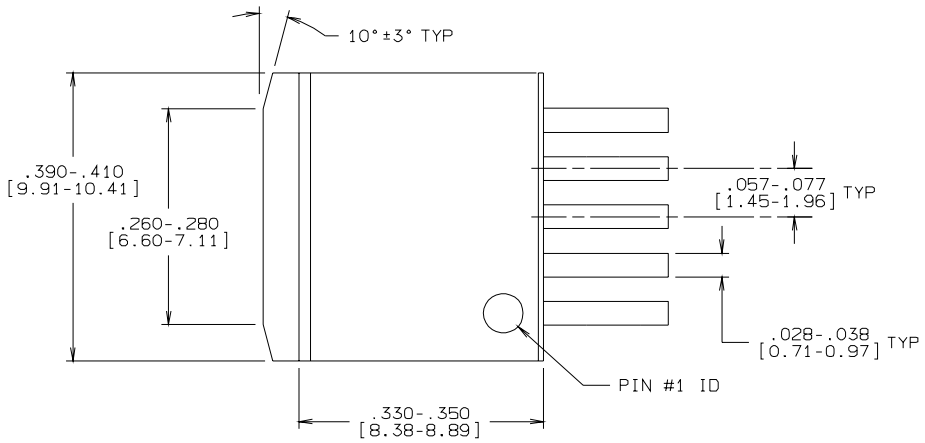

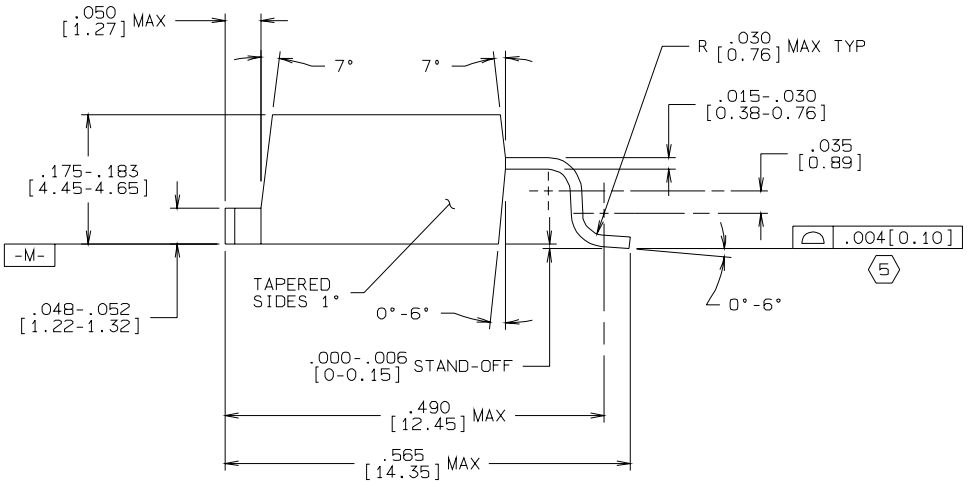

CONTROLLING DIMENSION: INCH

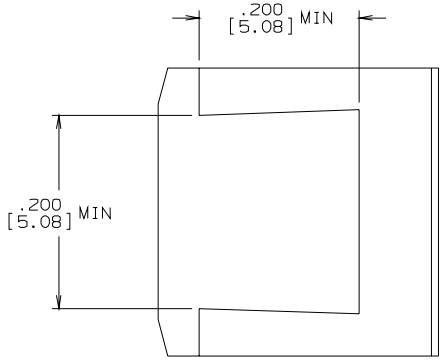

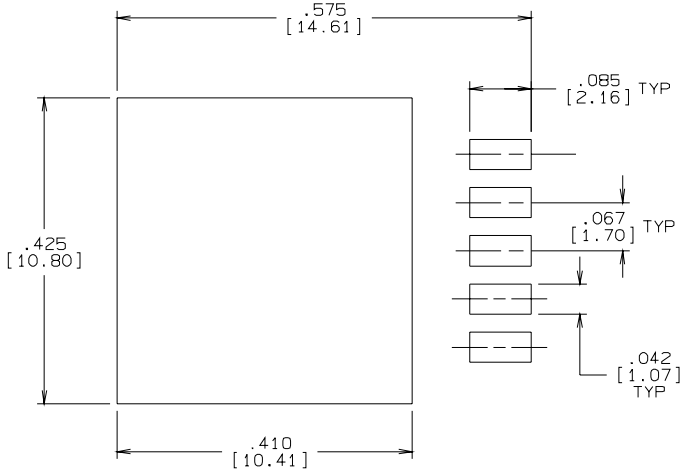

LEAD POSITION OVERLAY

NOTES: UNLESS OTHERWISE SPECIFIED

1. STANDARD LEAD FINISH:
   200 MICROINCHES / 5.08 MICROMETERS MINIMUM
   LEAD/TIN 15/85 ON OLIN 194 COPPER OR EQUIVALENT.
2. MAXIMUM VERTICAL BURR ON HEATSINK
   NOT TO EXCEED .003 INCH/ 0.08mm.
3. NO PACKAGE CHIPS, CRACKS OR SURFACE INDENTATION
   ALLOWED AFTER FORMING.
4. JEDEC REGISTRATION IN PROGRESS FOR BALLOT
   #10-340 AS OF 06-16-93.
5. UNDER ALL CONDITIONS LEAD(S) MUST NOT BE ABOVE THE DATUM PLANE -M- AND NO LEADS MAY BE LOWER THAN .006 INCH/0.15mm MEASURED FROM DATUM PLANE -M- TO THE BOTTOM OF THE LEADS.

APPROVALS	DATE
DRAWN Kurt Sincerbox	07/27/93
DFTG. CHK.	
ENGR. CHK.	

National Semiconductor
2900 Semiconductor dr, Santa Clara, CA 95052-8090

TO-263, MOLDED, 5 LEAD, SURFACE MOUNT

PROJECTION	SCALE	SIZE	DRAWING NUMBER	REV
INCH [MM]	N/A	C	MKT-TS5B	C

DO NOT SCALE DRAWING | SHEET 1 OF 1